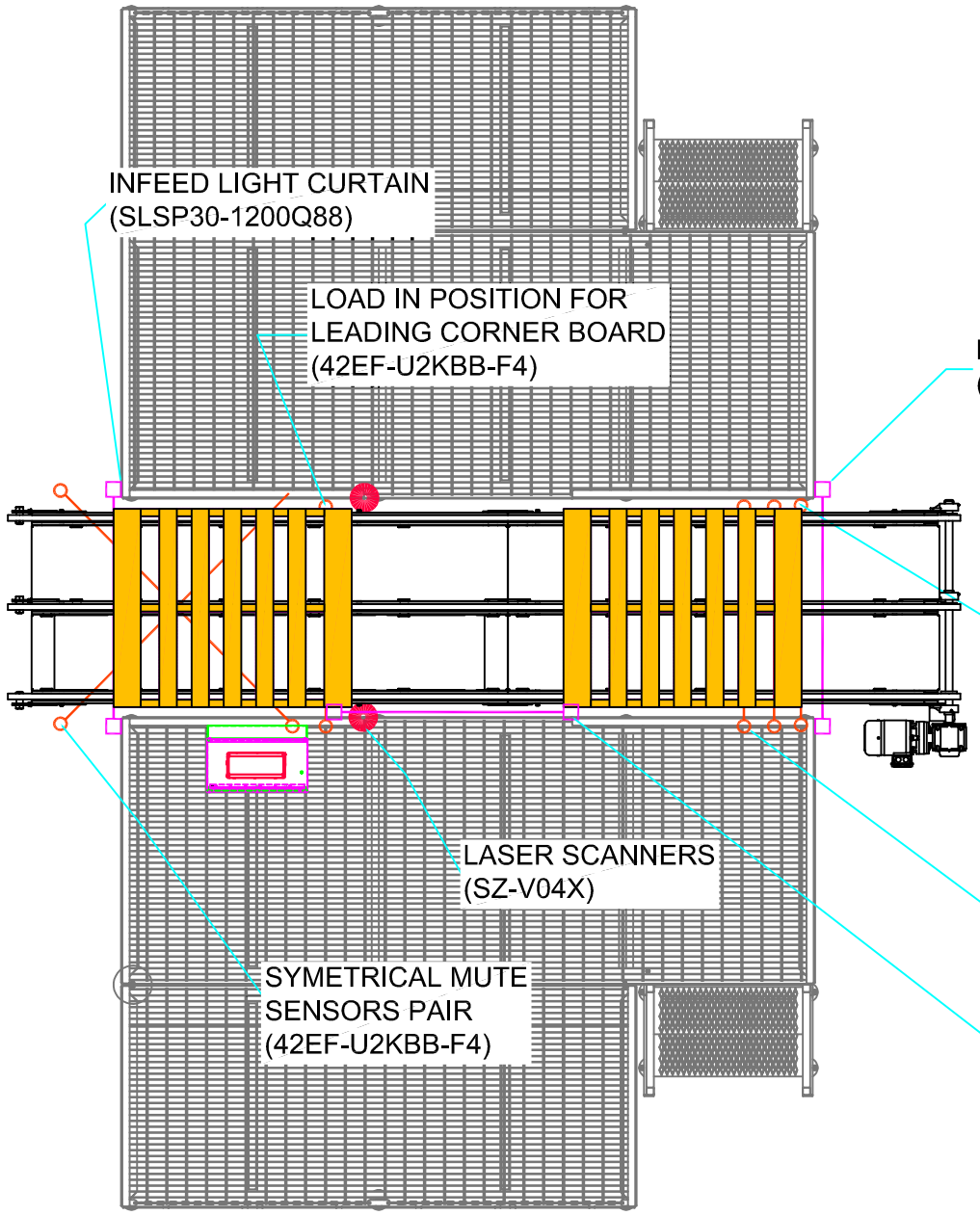

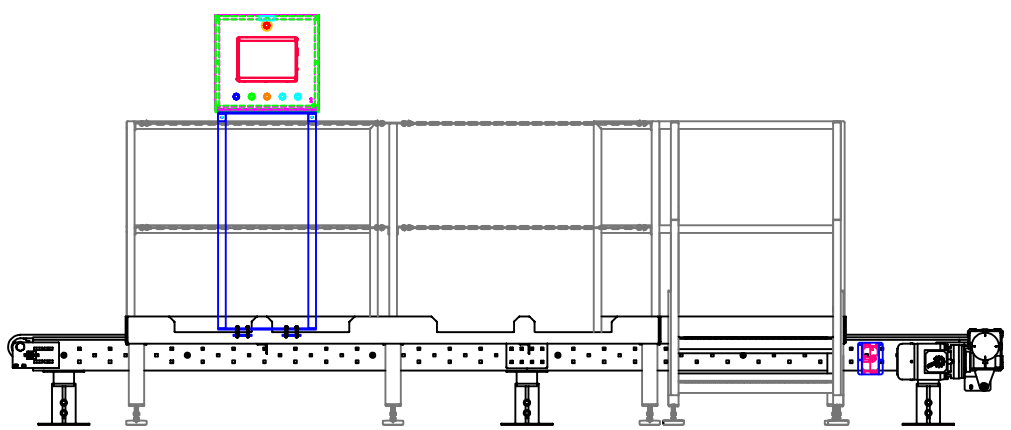

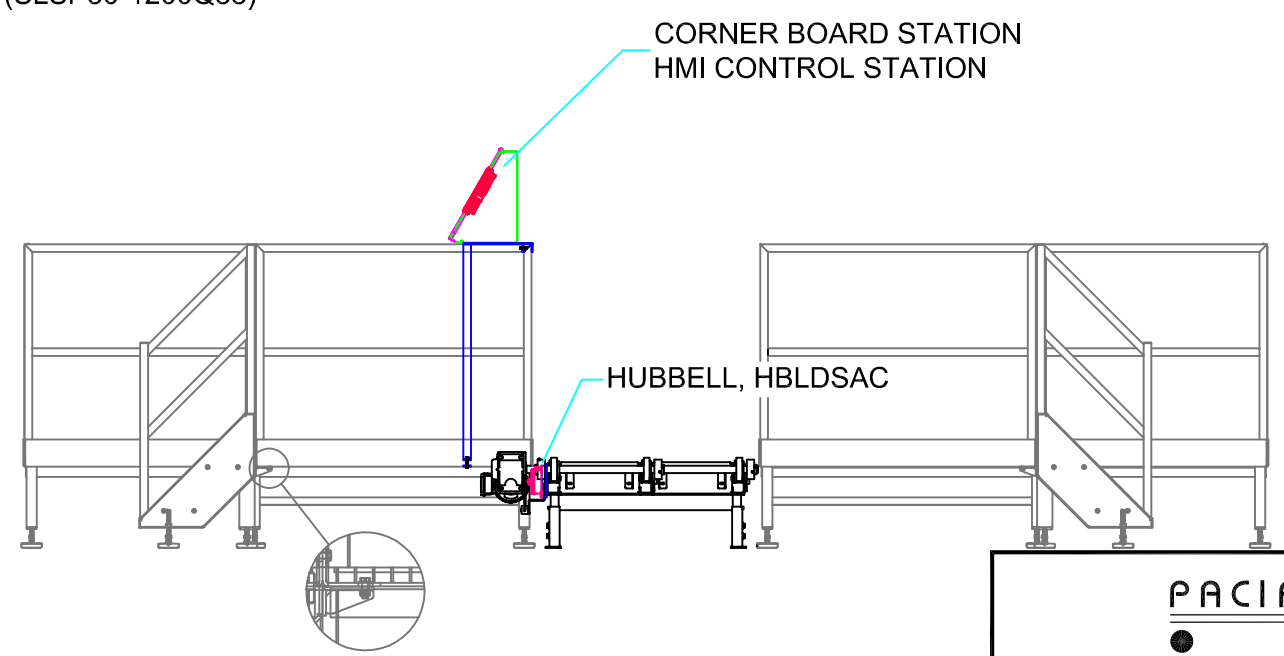

PACIFIC CONVEYOR SYSTEMS

1535 E. Edinger Avenue • Santa Ana, CA 92705

BLUE MARBLE PALLETIZER CONVEYOR CONTROL
(CORNER BOARD SYSTEM CONTROL LAYOUT)

SCALE: NONE	DRAWN BY: J.S/D.D	APPROVED BY: D.D	DRAWING NUMBER: 12926E-11 (11 OF 29)
DATE: 10/22/21	REVISED: 02/14/22		